SCALA NON IMPEGNATIVA (DO NOT SCALE)

DIMENSIONI IN (DIMENSIONS IN) mm

METRIC

PROIEZIONE EUROPEA (EUROPEAN PROJECTION)

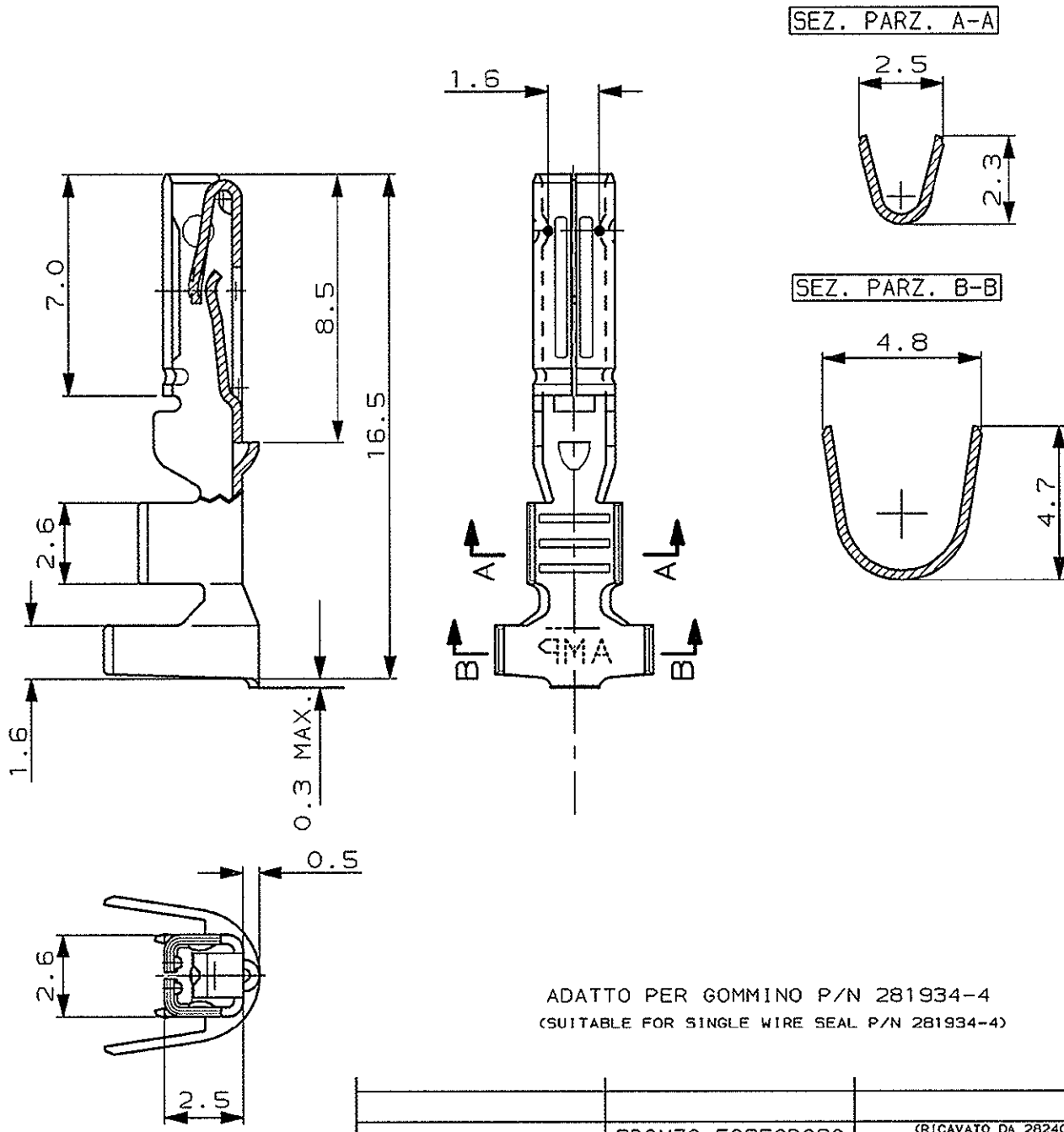

ADATTO PER GOMMINO P/N 281934-4
(SUITABLE FOR SINGLE WIRE SEAL P/N 281934-4)

PRE-STAGNATO (PRE-TINNED)	BRONZO FOSFOROSO (PH.BRONZE)	(RICAVATO DA 282403-1) (MADE FROM 282403-1) 183035-1
FINITURA / COLORE (FINISH / COLOUR)	MATERIALE (MATERIAL)	NUMERO (PART NUMBER)

CUSTOMER DWG. FOR REFERENCE ONLY

DISEGNO PER CLIENTE SOLO PER RIFERIMENTO

~~THIS DRAWING IS UNPUBLISHED~~ RELEASE FOR PUBLICATION 19

© COPYRIGHT 1990 BY AMP INCORPORATED, HARRISBURG,PA. ALL INTERNATIONAL RIGHT RESERVED. AMP PRODUCTS MAY BE COVERED BY U.S. AND FOREIGN PATENT AND/OR PATENT PENDING

TOLLERANZE, SE NON DIVERSAMENTE SPECIFICATO (TOLERANCES, UNLESS OTHERWISE SPECIFIED)	DIAM. ISOLANTE (INS. DIA. RANGE)	RANGO FILO (WIRE RANGE)	SCALA (SCALE)
± 0.3	VED. NOTA	0.35-0.5mm²	5:1
ANGOLI (ANGLES) ± 2°			

tyco Electronics

AMP ITALIA S.p.A.
Corso F.lli Cervi,15
COLLEGNO (TORINO)

DIS. (DR.) C.PIA	17 MAY 93	DESCRIZIONE (DESCRIPTION) (LOOSE PIECE VERSION) MINI MIC SRS REC. CONTACT
CONT. (CHK) A.BRUNI	17 MAY 93	
APP. (APP.)		

LOC.	SIZE	NUMERO (DWG NO)	REV.	FOGLIO (SHEET)
I	A4	C-183035	A	1 DI (OF) 1

REV. (REV.LTR.)	REVISIONI (REVISION RECORD)	DIS. (DR)	DATA (DATE)
A	REVISED PER ET00-0024-04	M.G.	22 APR 2004

DISTRIBUZIONE (PRINT DIST.)

AMP-ITA 7524 - 5/02